LESLIE CONTROLS, INC.
A subsidiary of CIRCOR International, Inc.
12501 Telecom Drive • Tampa, FL 33637-0906

PRESSURE REDUCING VALVES AND DIFFERENTIAL PRESSURE REGULATORS

CLASSES J, L (E) (Y) (X) (K) (S) (T) (-3) (-4) (-5) ETC.

ALL "L" AND "J" TYPE SELF-CONTAINED PRESSURE REGULATORS WHOSE CLASS CONTAINS ANY COMBINATION OF THE ABOVE ALPHABETICAL AND NUMERICAL DESIGNATIONS ARE COVERED IN THIS INSTRUCTION. EXAMPLE: L-3, LLKY, LX-4, LEKY, LS-4, LS-5, LA-5, JA-2, JL, J-1 ETC.

EXPLANATION OF LETTERS AND NUMBERS USED IN CLASS DESIGNATION OF REGULATORS:

(Y) - Piston fitted with a Teflon Cup Washer seal in lieu of a piston ring (S). Maximum operating temperature 500°F.

(A) - For Air and Gas service ONLY. Maximum operating temperature 150°F. Controlling valve and main valve have resilient seats for tight shut-off.

(E) - Fitted with EXTERNAL control pipe connection.

(LL) - Fitted with EXTERNAL control pipe connection. Adjustable Reduced Pressure range - 2 to 35 PSIG.

(X)* - Differential Pressure Regulator. Adjustable differential pressure range - 5 to 40 PSIG.

(J) - Diaphragm operated small flow regulator. Diaphragm used in lieu of a piston.

(JL) - Diaphragm operated small flow regulator fitted with EXTERNAL control pipe connection for low reduced pressures. Reduced pressure range - 1 to 50 PSIG.

(K) - Cast Iron.

(S) - Steel.

If the letter "K" or "S" does not appear in class, material is Bronze.

(Q) - LES-SONIC regulators fitted with "QUIET TRIM" that reduces Sound Pressure Levels to or below that required by the Walsh-Healy Act and OSHA.

***In other than last position. ("X" in last position indicates a special unit provided.)**

(T) - Regulator fitted with a remote air loading superstructure. Air Loading Panels suitable for this service are available from Leslie Co. 8 to 10 PSIG initial air loading pressure on diaphragm opens valve. For each additional 1 PSIG air loading pressure the reduced pressure change is approximately 7 PSIG. Maximum air loading pressure to diaphragm is 35 PSIG.

(-3) - Numerical designations in Class such as -3, -5 etc. indicate some change in design, material etc. that have been made in Class. It is important that drawing used for ordering parts indicates it is for class containing numerical designation assigned your regulator. Class is stamped on identification plate attached to regulator springs case.

TYPICAL INSTALLATION

NOTE: Bypass Position shown is schematic only, normally bypass piping is installed in same horizontal plane as valve.

- Where noise may be a factor follow recommendations for piping per instruction 5/0.3.1.
- Before installation, thoroughly flush or blow out all piping involved.
- Protect valve from dirt and scale with a Self-Cleaning Strainer.
- Inlet and outlet piping should be well drained to prevent water hammer and erosion of valve parts. Insulate all steam piping to minimize condensation.
- Provide specified minimum length of straight pipe before and after valve.
- Provide inlet and outlet stop valves and gauges so that valve may be properly adjusted and operation monitored.

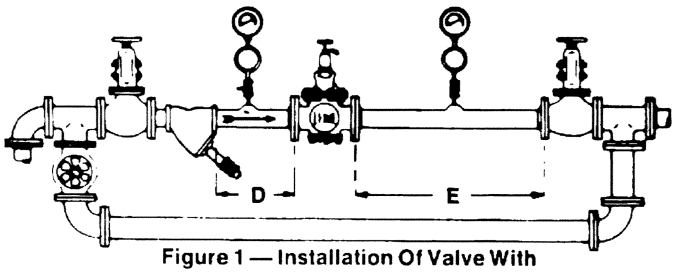

Figure 1 — Installation Of Valve With Internal Control Ports

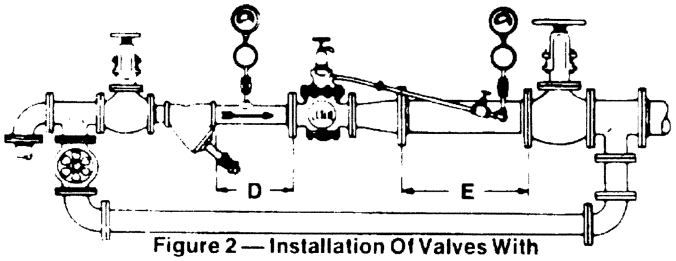

Figure 2 — Installation Of Valves With External Control Pipe

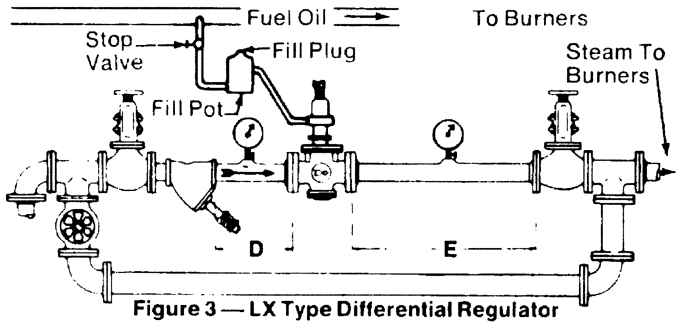

Figure 3 — LX Type Differential Regulator Steam Atomizing Service

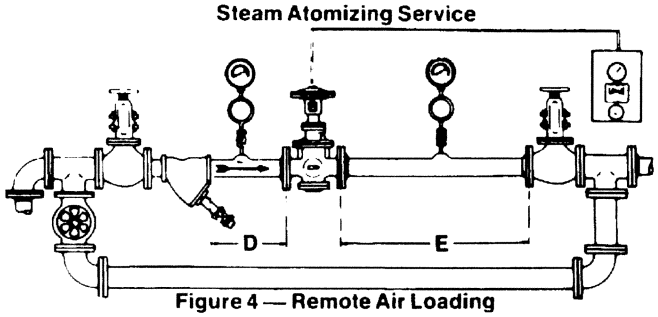

Figure 4 — Remote Air Loading "T" Type Superstructure

INSTALLATION

Install valve in upright position in highest horizontal straight run of piping with arrow cast on side of body in direction of flow.

Expanded Piping— Figure 2

When REDUCED PRESSURE is 25% or less of INLET pressure, outlet piping should be expanded to twice the valve size. A tapered expander should be used. External control pipe must be connected 2 to 3 feet AFTER end of expander and about 12 to 18 inches before outlet stop valve. Inner diameter of control pipe should be equivalent to that of a 1/4" schedule 40 pipe. Control pipe should slope toward outlet piping for drainage. Do NOT connect control pipe near elbow, tee or where turbulence may affect control. Proper piping will insure optimum control of reduced pressure.

Differential Pressure Regulators— Figure 3

Fill pot MUST be filled with a non-coagulating oil or glycerine mixture whenever viscous fluids are being controlled. Control pipe should be sloped so as to be self venting. Inner diameter of pipe should be equivalent to that of a 1/2" Schedule 40 pipe.

"T" Type Superstructures, Air Loaded— Figure 4

Air used should be clean and dry. Leslie Air Loading Panels are available for all remote air loaded valves. See Instruction 30/1.5.1 for maintenance of loading panels.

RECOMMENDED INSTALLATION DIMENSIONS

SIZE REDUCING VALVE	DIMENSIONS D	DIMENSIONS E
1/2" to 1 1/2"	1'6"	3'0"
2" to 4"	3'0"	5'0"
5" to 6"	4'0"	8'0"

OPERATION

1. Close inlet and outlet stop valves.
2. Remove compression from adjusting spring or air from superstructure of remote air loaded valves.

3. Open inlet stop valve and blow down piping by opening blow-off valve of strainer to dispose of dirt or condensate.

4. Open control pipe stop valve if one is used.

5. Crack open outlet stop valve to permit a slight flow.

6. Slowly screw down on adjusting spring screw until desired reduced pressure and or differential is obtained. Open outlet stop valve fully. If system is large and valve chatter occurs, throttle in on outlet stop valve until system pressure approaches desired reduced pressure before reopening stop valve fully.

REMOTE AIR LOADED VALVES

Slowly increase Air Loading to valve superstructure until desired reduced pressure is obtained.

DISASSEMBLY

Close inlet and outlet stop valves. Relieve all pressure from piping involved.

Spring Adjusted Types—Figure 5, 6 & 7 *(see Page 4)*

1. Remove compression from adjusting spring. Unscrew or unbolt spring case.
2. Lift out top spring seat, adjusting spring, bottom spring seat and diaphragm.

3. Remove control valve seat, control valve and control valve spring.

4. Remove top cap nuts and bolts. Lift off top cap and top cap gasket. (Diaphragm in "J" types)

Remote Air Loaded Types—Figure 9 *(see Page 5)*

1. Remove tubing from diaphragm cover. Unscrew superstructure from top cap.

2. Remove diaphragm disc and stem. Lift out diaphragm.

3. Remove control valve seat, control valve and control valve spring.

4. Remove top cap nuts and bolts. Lift off top cap and top cap gasket. (Diaphragm in "J" types)

Disassembly of LX Type Superstructures—Figure 8 *(see Page 4)*

1. Remove control pipe and all compression from adjusting spring.

2. Remove connecting rod nuts and stud bolt nuts.

3. Lift off spring case. Remove adjusting spring, top and bottom spring seats and crosshead.

4. Remove connecting rods, diaphragm spacer, diaphragm, stem cap, lower crosshead, spring, spring guide and diaphragm stem.

5. Remove nuts and bolts from top cap. Lift off top cap and top cap gasket.

DISASSEMBLY OF VALVE BODY

1. Remove piston, cylinder liner and cylinder bottom.

2. Remove bottom cap, bottom cap gasket, main valve spring and main valve.

CLEANING

Clean and polish all parts. Replace any worn or damaged parts. Use new gaskets when reassembling valve. Use crocus or 320 Aluminum Oxide cloth to polish plated bronze cylinder liners to prevent damage to plating. Use fine lapping compound, Carborundum Grade CF, to lap in main valves and control valves and seats. DO NOT overlap. Check gasket, diaphragm, control valve seat and seat ring seating surfaces in body and top cap for steam cuts or erosion. All surfaces must be clean and smooth to insure a steam tight joint. If remachining is necessary it is recommended that valve or parts be returned to Leslie Co. Service Division for repair as ALL CRITICAL DIMENSIONS must be maintained during machining process.

New gaskets should be used when reassembling valve to insure steam tight joints. This is especially true when valves are fitted with flexible metallic type gaskets. Play Safe, use only genuine Leslie replacement gaskets and parts.

*** Contact factory for pricing.**

PRESSURE REDUCING VALVES AND DIFFERENTIAL PRESSURE REGULATORS

INSTALLATION, OPERATION, AND MAINTENANCE

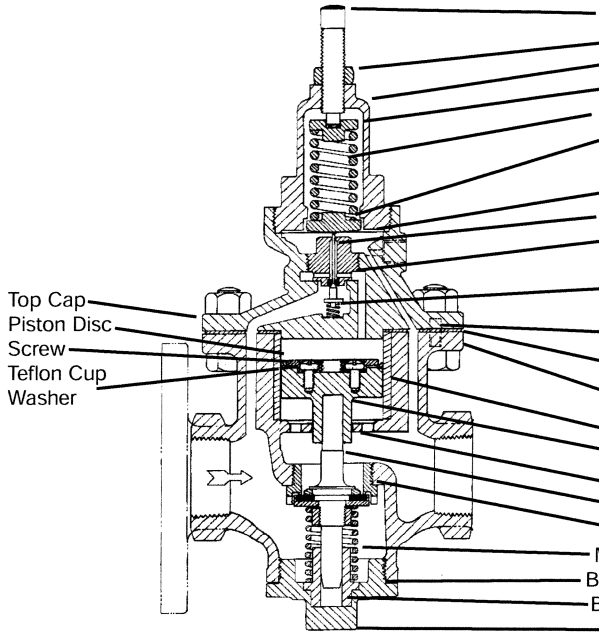

Figure 5 — Type LY

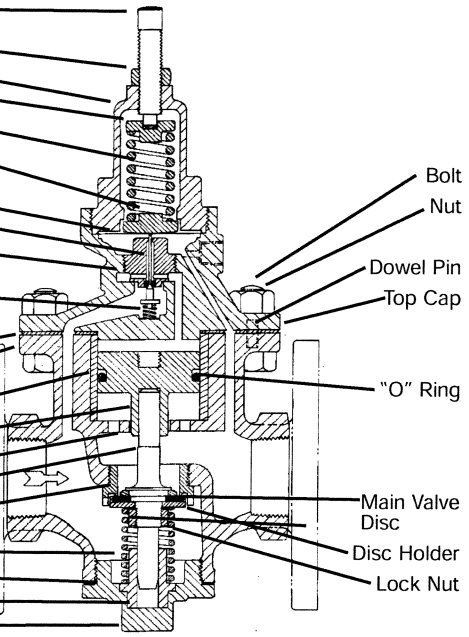

Figure 6 — Type LA-5

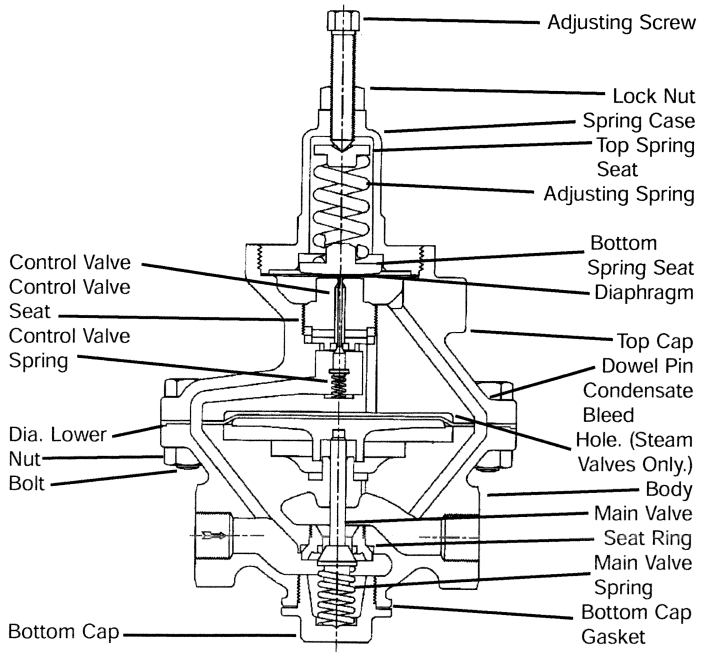

Figure 8 — Type J-1

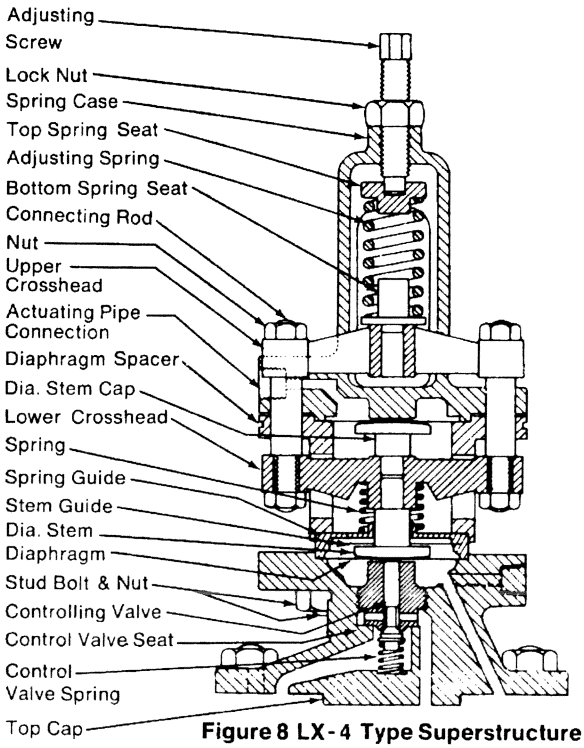

Figure 8 LX-4 Type Superstructure

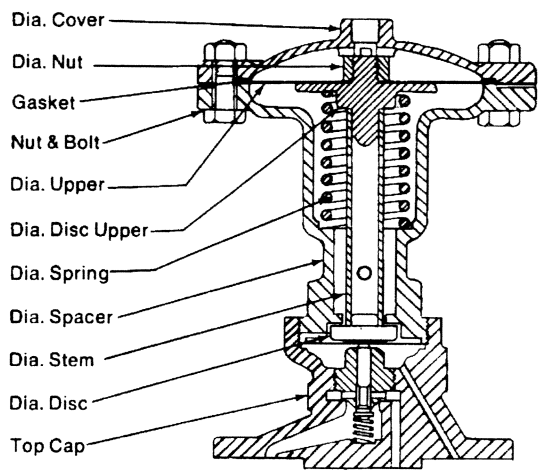

Remote Air Loaded Types — Figure 9

REPLACEMENT OF SUPERSTRUCTURE DIAPHRAGM

1. Remove nuts and bolts and lift off diaphragm cover and gasket.

2. Remove diaphragm disc assembly.

3. Remove diaphragm nut and diaphragm. Install new diaphragm over upper disc and tighten diaphragm nut.

4. Install diaphragm assembly, gasket and diaphragm cover. Replace nuts and bolts and tighten evenly.

REPLACING PISTON CUP WASHER

1. Remove screw(s) and lift off piston disc and piston cup washer.

2. Align new piston cup washer on piston with beveled edge of cup washer upward.

3. Install piston disc and tighten screw(s) evenly until raised face of disc bottoms in piston recess.

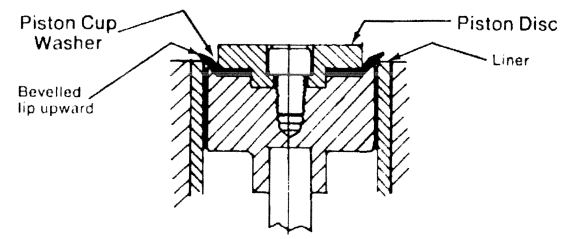

Figure 10. Piston Cup Washer

REPLACING PISTON RINGS

Remove piston ring (s) from piston. Clean ring grooves. Expand ring gap just enough to slide ring down over piston and into ring groove. Over expansion may cause ring to break. Do not lubricate rings.

LAPPING IN VALVES (Steam Service)

Place a small amount of Carborundum Grade CF or equivalent lapping compound evenly spaced around main valve seating surface. Place cylinder liner and piston in body to act as guide and lightly lap main valve to seat. Remove all traces of compound after lapping. Control valve and seat may be lapped if necessary.

REPLACING RESILIENT SEAT (Air Service)

Remove lock nut, disc holder and main valve disc. Use reverse side of disc or replace with new disc. Replace main valve disc, disc holder and lock nut. Tighten lock nut. A main valve skirt is used on sizes 2-1/2" and larger. DO NOT lap parts. If main valve leaks, place a drop of light oil on seat and burnish valve by turning valve on seat using a light pressure. Remove oil by cleaning in solvent.

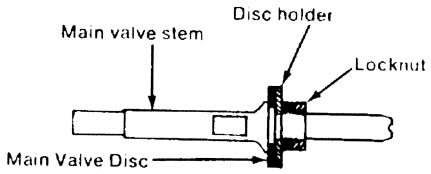

Figure 11. Main Valve with Resilient Seat

REASSEMBLY

1. Place gasket, main valve spring and main valve on bottom cap and screw or bolt bottom cap to body.

2. Install cylinder bottom, cylinder liner and piston in body. If piston is fitted with a Teflon cup washer and is difficult to push into cylinder liner, heat piston assembly in very hot water before installing piston in liner.

3. Classes J-1, JA-2. JI and JAL-2 require adequate lower diaphragm travel for proper operation. To be sure of proper travel, clearance between body flange face and main valve stem should be:

   J-1, JL-1/16" $^{+1/64}_{-.000}$ JA-2, JAL-2-3/32 $^{+1/32}_{-.000}$

   Check clearance with straight edge and scale.

4. Install diaphragm disc and align lower diaphragm so that port holes are open.

   NOTE: "J" VALVES USED FOR STEAM

   NOTE: "J" valves used for steam service - top cap has a small bleed hole to allow condensate to escape from lower diaphragm chamber. (See Fig. 7) Make sure hole is clean before installing top cap.

5. Place top cap on body and tighten nuts and bolts evenly.

6. Install control valve spring, control valve and control valve seat. Tighten seat. Before installation of "JA" and "LA" type control valve be sure to push spring up and around bottom end of control valve to insure spring remains in place during installation.

   Check control valve clearance. End of control valve should be for .001 to .002 in. below diaphragm seat. Maximum clearance for "L" type is .005 in. and for LA and JA types .006 in. If clearance is greater than allowed maximum the top cap should be remachined to restore original dimensions.

7. Install diaphragm, bottom spring seat, adjusting spring, top spring seat and spring case. Tighten spring case.

7a. "T" Type Superstructure - Fig 9

Install diaphragm, diaphragm disc, diaphragm steam and diaphragm spacer. Screw spacer into top cap threads and tighten spacer sufficiently to obtain a steam tight seal.

7b. LX Type Superstructure - Fig. 8

1. Install diaphragm. Position diaphragm stem on diaphragm. Place spring guide over diaphragm stem with small raised face upward. Install spring over raised face of spring guide.

2. Assemble lower crosshead in diaphragm spacer with spring recess downward. Position steam cap on crosshead with end of stem in hole in crosshead. Place diaphragm in spacer over stem cap. Position assembled parts on spring making sure end of diaphragm stem enters hole in crosshead.

3. Place spring case on diaphragm spacer. Insert stud bolts through spring case, diaphragm spacer and top cap. Press down on spring case making sure all parts are properly aligned and tighten stud bolt nuts evenly and securely.

4. Install connecting rods. Replace-lower connecting rod nuts and tighten. Insert upper crosshead through opening in spring case and over ends of connecting rods with bowed side of crosshead upward.

5. Assembly nuts to connecting rods and tighten nuts.

6. Install bottom spring seat, adjusting spring and top spring seat. Reconnect control pipe

   See section Titled "OPERATION" for start-up and adjustment of regulator

TROUBLE SHOOTING

1. PROBLEM: Reduced Pressure Cycle	
POSSIBLE CAUSE	**REMEDY**
1. Installation incorrect.	Correct in accordance with Installation Instructions.
2. Cycle feedback from components installed downstream of Leslie regulator.	Check system components and eliminate instability.
3. Unstable or varying inlet steam pressure to regulator.	Check and correct condition.
4. Dirt or foreign matter restricting free movement of regulator parts.	Disassemble regulator and clean. Replace piston rings, piston cup washer etc. if worn or damaged.
5. Improperly drained piping allowing condensate to enter regulator.	Check traps for proper operation.
6. Regulator oversized for minimum load condition.	Check flow requirements and contact your Leslie Agent regarding any necessary changes.
2. PROBLEM: LX Type Differential Regulators - will not maintain a constant differential within the adjustable limits of 5 to 40 psig. Poor response to changes in differential.	
1. By-pass around regulator leaking.	Repair or replace by-pass valve.
2. Control pipe plugged.	Remove and clean pipe and stop valve.
3. Loss of non-coagulating liquid from fill pot and regulator pressure sensing chamber.	Clean and refill.
4. Dirt or foreign matter preventing free movement of regulator parts.	Disassemble and clean.
5. Build-up of condensate before or after regulator. Condensate entering piston chamber can cause chatter.	Check traps for proper operation.

TROUBLE SHOOTING cont.

NOTE: Increase in steam pressure above reduced pressure setting required to obtain tight shut-off is 5 psig for low pressure regulators and 10 psig for high pressure regulators. Regulators have a 25:1 inverse ratio, that is if inlet pressure increases 25 psig the adjusted reduced steam pressure will decrease 1 psig and vice versa.

3. PROBLEM: Excessive build-up of reduced pressure during NO FLOW conditions.

POSSIBLE CAUSE	REMEDY
1. By-pass around regulator leaking.	Repair or replace by-pass valve.
2. Build-up of condensate before or after regulator.	Check traps for proper operation.
3. Incorrect controlling valve clearance.	Check clearance and correct in accordance with maintenance instructions.
4. Foreign matter or dirt between main valve or controlling valve seating surfaces. Seating surfaces eroded.	Disassemble and clean regulator. Use extra fine lapping compound to lap in main valve and controlling valve of steam service regulators.
5. J & JL Types Only - condensate bleed hole in top cap plugged	Remove top cap and clean bleed hole.
6. J Type Regulators Only - incorrect clearance between end of main valve	See Section titled "REASSEMBLY" for proper clearance. and main body flange.
7. Incorrect controlling valve in regulator.	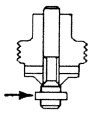 NO GROOVE Controlling Valve Ref. No. 32144 for use with teflon piston seal only. 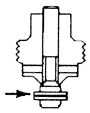 GROOVE Controlling Valve Ref. No. 4938 for use with piston with rings only.

4. PROBLEM: Excessive increase in reduced pressure during LOW FLOW condition.

1. Reduced pressure overset. This can occur if reduced pressure is adjusted while flow demand is greater than rated capacity of regulator.	Readjust reduced pressure at flow not greater than 25% of rated capacity.

PRESSURE REDUCING VALVE
SIZES 1/2" TO 4" "L" CLASSES

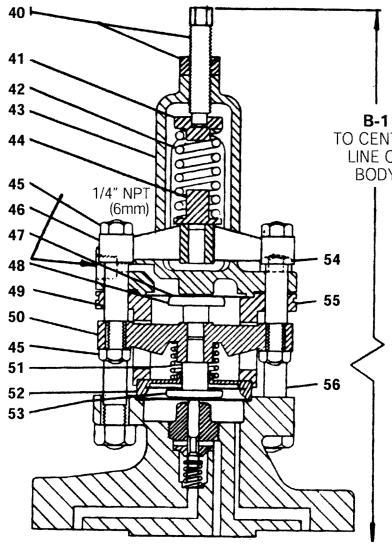

VIEW SHOWING SPRING HOUSING SUB-ASSEMBLY OF CLASS LX-4, PARTS 40 TO 56 INCLUSIVE UNIT REF. NO. 008173701

FOR ALL OTHER PARTS NOT SHOWN, USE CLASSES LY, L-3, ETC. TABLES I, II, III

FOR APPROXIMATE WEIGHT ADD 7 LBS. TO WEIGHT ON PAGE 1

CLASSIFICATION	
BASIC STANDARD CLASS	WITH DIFFERENTIAL PRESSURE SUPERSTRUCTURE
L-3 & L-4	LX-4
LE-3 & LE-4	LEX-4
LY	LXY
LEY	LEXY
LKY	LXKY
LEKY	LEXKY

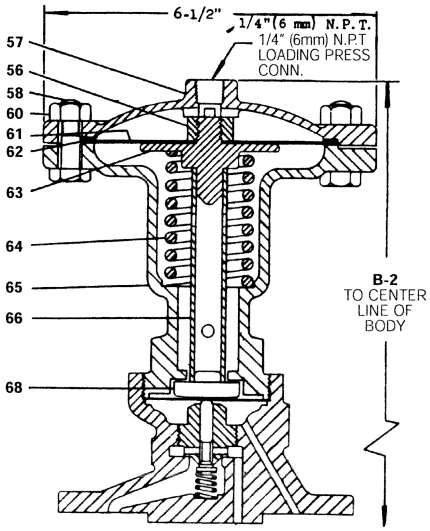

VIEW SHOWING DIAPHRAGM SPACER SUB-ASSEMBLY FOR CLASS LT-3, LTY, ETC., PARTS 57 TO 66 INCLUSIVE UNIT REF. NO. 008023701.

FOR ALL OTHER PARTS NOT SHOWN, USE CLASS LY, L-3, ETC. TABLES I, II, III.

FOR ALL OTHER PARTS NOT SHOWN FOR CLASS LAT, LAET, ETC. USE CLASS LA-5, LAE-5 ETC. TABLES I AND IV.

FOR APPROXIMATE WEIGHT ADD 10 LBS. TO WEIGHT ON PAGE 1

NOMINAL PIPE SIZE		DIMENSIONS IN INCHES AND MILLIMETERS								NO. OF HOLES	SIZE OF HOLES	BOLT SIZE	NET WT.*
		A	B	C	D	E	F	G	H				
THREADED (BRONZE AND IRON)													
1/2	in	5-3/4	10	2-3/4*	- -	- -	- -	- -	- -	- -	- -	- -	20 lb
15	mm	146.1	254.0	69.9*	- -	- -	- -	- -	- -	- -	- -	- -	9.1 kg
3/4	in	5-3/4	10	2-3/4*	- -	- -	- -	- -	- -	- -	- -	- -	20 lb
20	mm	146.1	254.0	69.9**	- -	- -	- -	- -	- -	- -	- -	- -	9.1 kg
1	in	5-3/4	10	2-3/4*	- -	- -	- -	- -	- -	- -	- -	- -	20 lb
25	mm	146.1	254.0	69.9*	- -	- -	- -	- -	- -	- -	- -	- -	9.1 kg
1-1/4	in	5-3/4	10-1/4	3-1/16*	- -	- -	- -	- -	- -	- -	- -	- -	23 lb
32	mm	146.1	260.4	77.8	- -	- -	- -	- -	- -	- -	- -	- -	10.4 kg
1-1/2	in	6-1/4	10-5/8	3-5/8*	- -	- -	- -	- -	- -	- -	- -	- -	28 lb
40	mm	158.8	269.9	92.1	- -	- -	- -	- -	- -	- -	- -	- -	12.7 kg
2	in	7-1/2	11-1/8	3-1/2*	- -	- -	- -	- -	- -	- -	- -	- -	40 lb
50	mm	190.5	282.6	88.9	- -	- -	- -	- -	- -	- -	- -	- -	18.1 kg
125 LB. ANSI FLANGE (IRON)													
1-1/2	in	7-1/2	10-5/8	4-1/8	5	9/16	- -	3-7/8	- -	4	5/8	1/2	42 lb
40	mm	190.5	269.9	104.8	127.0	14.3	- -	98.4	- -	4	15.9	12.7	19.1 kg
2	in	8-3/4	11-1/8	4-3/8	6	5/8	- -	4-3/4	- -	4	3/4	5/8	50 lb
50	mm	222.3	282.6	111.1	152.4	15.9	- -	120.7	- -	4	19.1	15.9	22.7 kg
2-1/2	in	9-3/4	12	5-1/2	7	11/16	- -	5-1/2	- -	4	3/4	5/8	72 lb
65	mm	247.7	304.8	139.7	177.8	17.5	- -	139.7	- -	4	19.1	15.9	32.7 kg
3	in	11	12-1/2	6-1/2	7-1/2	3/4	- -	6	- -	4	3/4	5/8	104 lb
80	mm	279.4	317.5	165.1	190.5	19.1	- -	152.4	- -	4	19.1	15.9	47.2 kg
4	in	13-1/2	14	7	9	15/16	- -	7-1/2	- -	8	3/4	5/8	160 lb
100	mm	342.9	355.6	177.8	228.6	23.8	- -	190.5	- -	8	19.1	15.9	72.6 kg
250 LB. ANSI FLANGE STANDARD (IRON)													
1-1/2	in	8	10-5/8	4-1/8	6-1/8	3/4	3-9/16	4-1/2	1/16	4	7/8	3/4	46 lb
40	mm	203.2	269.9	104.8	155.6	19.1	90.5	114.3	1.6	4	22.2	19.1	20.9 kg
2	in	9-1/4	11-1/8	4-3/8	6-1/2	13/16	4-3/16	5	1/16	8	3/4	5/8	54 lb
50	mm	235.0	282.6	111.1	165.1	20.6	106.4	127.0	1.6	8	19.1	15.9	24.5 kg
2-1/2	in	10-3/8	12	5-1/2	7-1/2	15/16	4-15/16	5-7/8	1/16	8	7/8	3/4	78 lb
65	mm	263.5	304.8	139.7	190.5	23.8	125.4	149.2	1.6	8	22.2	19.1	35.4 kg
3	in	11-3/4	12-1/2	6-1/2	8-1/4	1-1/16	5-11/16	6-5/8	1/16	8	7/8	3/4	107 lb
80	mm	298.5	317.5	165.1	209.6	27.0	144.5	168.3	1.6	8	22.2	19.1	48.5 kg
4	in	14-1/8	14	7-1/2	10	1-3/16	6-15/16	7-7/8	1/16	8	7/8	3/4	176 lb
100	mm	358.8	355.6	190.5	254.0	30.2	176.2	200.0	1.6	8	22.2	19.1	79.8 kg
150 LB. ANSI FLANGE STANDARD (BRONZE)													
1/2	in	6-3/4	10	2-13/16	3-1/2	9/16	- -	2-3/8	- -	4	5/8	1/2	26 lb
15	mm	171.5	254.0	71.4	88.9	14.3	- -	60.3	- -	4	15.9	12.7	11.8 kg
3/4	in	6-3/4	10	2-13/16	3-7/8	9/16	- -	2-3/4	- -	4	5/8	1/2	26 lb
20	mm	171.5	254.0	71.4	98.4	14.3	- -	69.9	- -	4	15.9	12.7	11.8 kg
1	in	6-3/4	10	2-13/16	4-1/4	19/32	- -	3-1/8	- -	4	5/8	1/2	26 lb
25	mm	171.5	254.0	71.4	108.0	15.1	- -	79.4	- -	4	15.9	12.7	11.8 kg
1-1/4	in	7	10-1/4	3-1/16	4-5/8	9/16	- -	3-1/2	- -	4	5/8	1/2	28 lb
32	mm	177.8	260.4	77.8	117.5	14.3	- -	88.9	- -	4	15.9	12.7	12.7 kg
1-1/2	in	7-1/2	10-5/8	3-7/16	5	9/16	- -	3-7/8	- -	4	5/8	1/2	38 lb
40	mm	190.5	269.9	87.3	127.0	14.3	- -	98.4	- -	4	15.9	12.7	17.2 kg
2	in	8-3/4	11-1/8	3-1/*2	6	5/8	- -	4-3/4	- -	4	3/4	5/8	48 lb
50	mm	222.3	282.6	88.9	152.4	15.9	- -	120.7	- -	4	19.1	15.9	21.8 kg
2-1/2	in	9-3/4	12	4-3/8	7	11/16	- -	5-1/2	- -	4	3/4	5/8	67 lb
65	mm	247.7	304.8	111.1	177.8	17.5	- -	139.7	- -	4	19.1	15.9	30.4 kg
3	in	11	12-1/2	5-1/4	7-1/2	3/4	- -	6	- -	4	3/4	5/8	102 lb
80	mm	279.4	317.5	133.4	190.5	19.1	- -	152.4	- -	4	19.1	15.9	46.3 kg
3-1/2	in	12	13-1/8	6	8-1/2	11/16	- -	7	- -	8	3/4	5/8	114 lb
90	mm	304.8	333.4	152.4	215.9	17.5	- -	177.8	- -	8	19.1	15.9	51.7 kg
4	in	13	14	7	9	11/16	- -	7-1/2	- -	8	3/4	5/8	160 lb
100	mm	330.2	355.6	177.8	228.6	17.5	- -	190.5	- -	8	19.1	15.9	72.6 kg
300 LB. ANSI FLANGE (BRONZE)													
1/2	in	6-3/4	10	2-13/16	3-3/4	9/16	- -	2-5/8	- -	4	5/8	1/2	28 lb
15	mm	171.5	254.0	71.4	95.3	14.3	- -	66.7	- -	4	15.9	12.7	12.7 kg
3/4	in	6-3/4	10	2-13/16	4-5/8	9/16	- -	3-1/4	- -	4	3/4	5/8	30 lb
20	mm	171.5	254.0	71.4	117.5	14.3	- -	82.6	- -	4	19.1	15.9	13.6 kg
1	in	6-3/4	10	2-13/16	4-7/8	19/32	- -	3-1/2	- -	4	3/4	5/8	32 lb
25	mm	171.5	254.0	71.4	123.8	15.1	- -	88.9	- -	4	19.1	15.9	14.5 kg
1-1/4	in	7	10-1/4	3-1/16	5-1/4	5/8	- -	3-7/8	- -	4	3/4	5/8	35 lb
32	mm	177.8	260.4	77.8	133.4	15.9	- -	98.4	- -	4	19.1	15.9	15.9 kg
1-1/2	in	7-1/2	10-5/8	3-7/16	6-1/8	11/16	- -	4-1/2	- -	4	7/8	3/4	42 lb
40	mm	190.5	269.9	87.3	155.6	17.5	- -	114.3	- -	4	22.2	19.1	19.1 kg
2	in	8-3/4	11-1/8	3-1/2	6-1/2	3/4	- -	5	- -	8	3/4	5/8	55 lb
50	mm	222.3	282.6	88.9	165.1	19.1	- -	127.0	- -	8	19.1	15.9	24.9 kg
2-1/2	in	9-3/4	12	4-3/8	7-1/2	11/16	- -	5-7/8	- -	8	7/8	3/4	70 lb
65	mm	247.7	304.8	111.1	190.5	17.5	- -	149.2	- -	8	22.2	19.1	31.8 kg
3	in	11	12-1/2	5-1/4	8-1/4	3/4	- -	6-5/8	- -	8	7/8	3/4	105 lb
80	mm	279.4	317.5	133.0	209.5	19.1	- -	168.3	- -	8	22.2	19.1	47.6 kg
3-1/2	in	12	13-1/8	6	9	13/16	- -	7-1/4	- -	8	7/8	3/4	118 lb
90	mm	304.8	333.4	152.4	228.6	20.6	- -	184.2	- -	8	22.2	19.1	53.5 kg
4	in	13	14	7	10	1-1/16	- -	7-7/8	- -	8	7/8	3/4	165 lb
100	mm	330.2	355.6	177.8	254.0	27.0	- -	200.0	- -	8	22.2	19.1	74.8 kg

CLASSIFICATION	
BASIC STANDARD CLASS	WITH REMOTELY ADJUSTED SUPERSTRUCTURE
L3 &	LT-3
LE-3 & LE-4	LET
LY	LTY
LEY	LETY
LKY	LKTY
LEKY	LEKTY
LA-5	LAT
LAE-5	LAET
LAK	LAKT
LAEK	LAEKT

FOR COMPLETE LIST OF PART NAMES, MATERIALS AND PART REFERENCE NUMBERS, SEE PAGES 2 & 3

* Add 1/2" (12.7mm) for 1/2" (15mm) to 1-1/2" (40mm) Sizes and 3/4" (19.1mm) for 2" (50mm) Size for all Cast Iron Values.

** Approximate

NOM. PIPE SIZE	B-1	B-2
1/2" - 1" (15mm - 25mm)	13-7/8" (352.4mm)	11-1/8" (282.6mm)
1-1/4" (32mm)	14-1/4" (362.0mm)	11-3/8" (288.9mm)
1-1/2" (40mm)	14-1/2" (368.3mm)	11-3/4" (298.5mm)
2" (50mm)	15" (381.0mm)	12-1/4" (311.2mm)
2-1/2" (65mm)	15-3/16" (385.8mm)	13-1/8" (333.4mm)
3" (80mm)	16-3/8" (415.9mm)	13-5/8" (346.1mm)
3-1/2" (90mm)	16-7/8" (428.6mm)	14-1/4" (362.0mm)
4" (100mm)	18-1/4" (463.6mm)	15-1/8" (384.2mm)

TABLE I

TABLE SHOWING PARTS THAT ARE INTERCHANGEABLE FOR SIZE, IN ALL "L" BRONZE AND IRON REDUCING VALVES

PART NO.	PART NAME	MATERIAL	MATERIAL SPEC.	QTY. PER UNIT	REFERENCE NUMBER - EACH SIZE									
					1/2	3/4	1	1-1/4	1-1/2	2	2-1/2	3	3-1/2	4
1	Adjusting Screw, Complete	Stainless Steel	AISI Type 416	1	9136	9136	9136	9136	9136	9136	9136	9136	9136	9136
2	Top Spring Seat	Brass	ASTM B-16	1	4869	4869	4869	4869	4869	4869	4869	4869	4869	4869
3	Adjusting Spring, L & LE	Spring Steel	AISI 5160	1	3582	3582	3582	3582	3582	3582	3582	3582	3582	3582
3	Adjusting Spring, LL	Spring Steel	AISI 5160	1	3635	3635	3635	3635	3635	3635	3635	3635	3635	3635
4	Spring Housing, L & LE	Cast Bronze	ASTM B-61	1	9366	9366	9366	9366	9366	9366	9366	9366	9366	9366
4	Spring Housing, LL	Cast Bronze	ASTM B-61	1	9384	9384	9384	9384	9384	9384	9384	9384	9384	9384
5	Bottom Spring Seat	Powdered Iron	Commercial	1	4959	4959	4959	4959	4959	4959	4959	4959	4959	4959
6 ❋	Diaphragm, L & LE	Stainless Steel	AISI Type 302	1	4552	4552	4552	4552	4552	4552	4552	4552	4552	4552
6 ❋	Diaphragm, LL	Stainless Steel	AISI Type 302	1	4995	4995	4995	4995	4995	4995	4995	4995	4995	4995
10	Bolt, Bronze Valve	Steel	ASTM A-193, Gr. B7	(1)	9008	9008	9008	9008	9008	4021	4021	3653	3653	19389
10	Bolt, Iron Valve	Steel	ASTM A-193, Gr. B7	(1)	23624	23624	23624	23624	23624	23624	28945	36150	- -	12984
11	Nut, Bronze Valve	Steel	ASTM A-194, Gr. 2H	(1)	3676	3676	3676	3676	3676	3676	3676	3677	3677	3678
11	Nut, Iron Valve	Steel	ASTM A-194, Gr. 2H	(1)	3676	3676	3676	3676	3676	3676	3676	3677	- -	33811
12	Pilot Housing, L	Cast Bronze	ASTM B-61	1	9428	9428	9428	9488	9404	9480	9453	9495	9499	- -
12	Pilot Housing, LE	Cast Bronze	ASTM B-61	1	9510	9510	9510	9536	9509	9508	9507	9537	9538	- -
12	Pilot Housing, LL	Cast Bronze	ASTM B-61	1	9300	9300	9300	9301	9302	9303	9304	9305	9306	- -
12	Pilot Housing, L, LK, Etc.	Steel	ASTM A-285, Gr. C	1	- -	- -	- -	- -	- -	- -	- -	- -	- -	21340
12	Pilot Housing, LX	Cast Bronze	ASTM B-61	1	9522	9522	9522	9532	9497	9498	11792	19984		
12	Pilot Housing, LEX	Cast Bronze	ASTM B-61	1	23957	23957	23957	33562	34017	33583	34018	34019	34020	
13 ❋	P. Housing Gasket, Bronze	Copper, Asb. Filled	ASTM B-152	1	4960	4960	4960	4945	4977	9003	9099	9177	9195	11967
13 ❋	P. Housing Gasket, Iron	Sheet Packing	Commercial	1	23567	23567	23567	23568	23569	23570	30320	30321	- -	30414
22 ★	Valve Plug Spring	Inconel	Commercial	1	9464	9464	9464	10201	3629	9252	9087	9176	4478	4478
23	Valve Body, Th'd., Bronze	Cast Bronze (2)	ASTM B-61	1	9400	9414	9528	9413	9412	9511	- -	- -	- -	- -
23	Valve Body, 150 Lb. Bronze	Cast Bronze (2)	ASTM B-61	1	44329	42799	44148	44147	44330	42785	44331	44332	44333	44334
23	Valve Body, 300 Lb. Bronze	Cast Bronze (2)	ASTM B-61	1	9487	9489	9529	9530	9387	9521	9411	9494	9512	11969
23	Valve Body, Th'd., Iron	Cast Iron (2)	ASTM A-126, C1.B	1	23500	23499	23505	23498	23495	23524	- -	- -	- -	- -
23	Valve Body, 125 Lb. Iron	Cast Iron (2)	ASTM A-126, C1.B	1	- -	- -	- -	- -	30960	30962	26092	26093	- -	21722
23	Valve Body, 250 Lb. Iron	Cast Iron (2)	ASTM A-126, C1.B	1	- -	- -	- -	- -	30961	30963	26156	26162	- -	33619
24 ❋	B.C. Gasket, Bronze Valve	(3)	(3)	1	3500	3500	3500	3499	9276	3504	9100	9178	9196	3508
24 ❋	B.C. Gasket, Iron Valve	(4)	Commercial	1	28138	28138	28138	28139	28140	18334	18524	18525	- -	18526
25 ★	Bushing, Iron Valve	Stainless Steel	ASTM A564 Type 630	1	60165	60165	60165	60166	60167	23526	26101	26119	- -	33800
26	Bottom Cap, Bronze Valve	Cast Bronze	ASTM B-61	1	3116	3116	3116	4241	9405	3122	9098	9175	9193	3126
26	Bottom Cap, Compl. Iron Valve	Cast Iron (6)	ASTM A-126, C1.B	1	60168	60168	60168	60169	60170	56492	56829	56830	- -	56831
27	Dowel Pin	Brass	ASTM B-16	1	3702	3702	3702	3702	3702	3702	3702	3702	3702	3705
28	Cylinder Bottom	Cold Rolled Steel	ASTM A-108 Gr. 1020	1	22617	22617	22617	22618	22619	22620	- -	- -	- -	- -
29	Cap Screw, Iron Valve	Steel	ASTM A-193, Gr. B7	(5)	- -	- -	- -	- -	- -	9130	13533	11886	- -	11886
29	Cap Screw, Bronze Valve	Steel	ASTM A-193, Gr. B7	(5)	- -	- -	- -	- -	- -	3709	9130	3716	3712	3716
30	Pilot Housing, L	Cast Bronze	ASTM B-61	1	- -	- -	- -	- -	- -	- -	- -	- -	- -	9428
30	Pilot Housing, LE	Cast Bronze	ASTM B-61	1	- -	- -	- -	- -	- -	- -	- -	- -	- -	9510
30	Pilot Housing, LL	Cast Bronze	ASTM B-61	1	- -	- -	- -	- -	- -	- -	- -	- -	- -	9300
30	Pilot Housing, LX	Cast Bronze	ASTM B-61	1	- -	- -	- -	- -	- -	- -	- -	- -	- -	9522
30	Pilot Housing, LEX	Cast Bronze	ASTM B-61	1	- -	- -	- -	- -	- -	- -	- -	- -	- -	23957
31	Cap Screw	Steel	ASTM A-193, Gr. B7	6	- -	- -	- -	- -	- -	- -	- -	- -	- -	3709
32	Dowel Pin	Brass	ASTM B-16	1	- -	- -	- -	- -	- -	- -	- -	- -	- -	3702
33 ❋	Hous. Gasket, Bronze Valve	Copper, Asb. Filled	ASTM B-152	1	- -	- -	- -	- -	- -	- -	- -	- -	- -	4960
33 ❋	Hous. Gasket, Iron Valve	Sheet Packing	Commercial	1	- -	- -	- -	- -	- -	- -	- -	- -	- -	23567
	Seat Ring Wrench	Steel	SAE 1030	1	28066	28066	28066	28067	28068	28069	53156	53157	53158	53159
	Pilot Plug Seat Wrench	Steel	Commercial	1	33652	33652	33652	33652	33652	33652	33652	33652	33652	33652

TABLE II

TABLE SHOWING PARTS USED FOR LY, LKY, LEY, LEKY, LLY AND LLKY IN ADDITION TO TABLE I ABOVE

PART NO.	PART NAME	MATERIAL	MATERIAL SPEC.	QTY. PER UNIT	REFERENCE NUMBER - EACH SIZE									
					1/2	3/4	1	1-1/4	1-1/2	2	2-1/2	3	3-1/2	4
7 ★	Pilot Plug & Seat Set	Stainless Steel	AISI Type 303	1	61656	61656	61656	61656	61656	61656	61656	61656	61656	61656
						32144								
9 ★	Pilot Plug Spring	Inconel	Commercial	1	4930	4930	4930	4930	4930	4930	4930	4930	4930	4930
14 ★	Cylinder Liner	Cast Bronze	ASTM B-61	1	4955	4955	4955	4940	4972	9039	9092	9169	9187	12006
15	Screw	Stainless Steel	AISI Type 301	(7)	39599	39599	39599	39596	39596	39596	39510	39510	39510	39512
16	Piston Disc	(9)	(9)	1	30469	30469	30469	30491	30495	30499	32943	32947	32951	32955
17	Piston Cup Washer	Teflon	Commercial	1	30470	30470	30470	30492	30496	30500	32944	32948	32952	32956
18	Piston	Cast Bronze	ASTM B-61	1	59929	59929	59929	59938	30494	30498	59945	59951	32950	59960
19 ★	Piston, Complete (8)	Bronze & Teflon	ASTM B-61 & Comm.	1	59930	59930	59930	59940	30493	30497	59947	59953	59957	59962
20	Valve Plug	Stainless Steel	AISI Type 420	1	13282	13282	13283	13284	13285	11124	47700	47630	47571	47568
21 ★	Seat Ring	Stainless Steel	AISI Type 410	1	9821	9821	9445	9544	9446	9447	9448	9569	9562	11970

TABLE III

TABLE SHOWING PARTS USED FOR L-3, L-4, LE-3, LE-4, LL-3, LL-4 IN ADDITION TO TABLE I ABOVE

PART NO.	PART NAME	MATERIAL	MATERIAL SPEC.	QTY. PER UNIT	REFERENCE NUMBER - EACH SIZE									
					1/2	3/4	1	1-1/4	1-1/2	2	2-1/2	3	3-1/2	4
7 ★	Pilot Plug & Seat Set	Stainless Steel	AISI Type 303	1	57700	57700	57700	57700	57700	57700	57700	57700	57700	57700
9 ★	Pilot Plug Spring	Inconel	Commercial	1	4930	4930	4930	4930	4930	4930	4930	4930	4930	4930
14 ★	Cylinder Liner	SST. Hardened	AISI Type 4400	1	11121	11121	11121	11172	11189	11122	11209	11195	11223	11966
18 ★	Piston (10)	Cast Bronze	ASTM B-61	1	9344	9344	9344	9379	9403	9481	59937	9463	59936	11971
20 ★	Valve Plug	Stainless Steel	AISI Type 420	1	13282	13282	13283	13284	13285	11124	47700	47630	47571	47568
21 ★	Seat Ring	Stainless Steel	AISI Type 410	1	9821	9821	9445	9544	9446	9447	9448	9569	9562	11970
34 ❋	Piston Ring	Cast Iron	ASTM A-126, C1.B	(11)	3355	3355	3355	3358	3359	3361	3362	3363	3565	3367

❋ RECOMMENDED SPARE PARTS

★ THESE PARTS SHOULD BE ON HAND, PLUS RECOMMENDED SPARE PARTS WHEN OVERHAULING THIS EQUIPMENT.

TABLE IV

TABLE SHOWING PARTS USED STRICTLY FOR LA-5, LAK, LAE-5, AND LAEK FOR ALL OTHER PARTS SEE TABLE I ON PAGE 4

PART NO.	PART NAME	MATERIAL	MATERIAL SPEC.	QTY. PER UNIT	REFERENCE NUMBER - EACH SIZE									
					1/2	3/4	1	1-1/4	1-1/2	2	2-1/2	3	3-1/2	4
7 ★	Pilot Plug & Seat	Phosphor Bronze	ASTM B-103	1	26161	26161	26161	26161	26161	26161	26161	26161	26161	26161
8 ★	Pilot Plug	Phos Brze. & Monel	ASTM B-103/127	1	26164	26164	26164	26164	26164	26164	26164	26164	26164	26164
9 ★	Pilot Plug Spring	Phosphor Bronze	ASTM B-103	1	13958	13958	13958	13958	13958	13958	13958	13958	13958	13958
14 ★	Cylinder Liner	Bronze	ASTM B-61	1	4955	4955	4955	4940	4972	9039	9092	9169	9187	12006
18	Piston (NOTE 12)	Cast Bronze	ASTM B-61	1	20489	20489	20489	20623	20487	20624	20625	20626	20652	20627
20 ★	Valve Plug, Compl. (NOTE 13)	(NOTE 13)	(NOTE 13)	1	26382	26382	26382	26383	26384	26385	26386	26387	26388	26389
21 ★	Seat Ring	Naval Bronze	ASTM B124 Alloy 464	1	23403	23403	23403	24696	24689	24676	23415	24730	24734	24786
25 ★	Bottom Cap Bushing, Iron Valve	Stainless Steel, P.H.	ASTM A564 Type 630	1	56933	56933	56933	56935	23501	23526	26101	26119	- -	33800
26	B Cap, Compl., Iron Valve (6)	Cast Iron	ASTM A-126, C1. B	1	23496	23496	23496	23502	56361	56492	56829	56830	- -	56831
34 ❋	O-Ring	Synthetic Rubber	Buna N	1	20628	20628	20628	20629	20492	20630	20631	20632	20651	20633
35	Valve Plug Stem	Stainless Steel	AISI Type 302	1	23402	23402	23402	24697	24690	24677	23412	24731	24735	24787
36	Washer	Bronze	ASTM B-61	1	- -	- -	- -	- -	24692	24679	- -	- -	- -	- -
36	Valve Plug Skirt	(NOTE 3)	(NOTE 14)	1	- -	- -	- -	- -	- -	- -	23414	24732	24736	24788
37 ❋	Valve Plug Disc	Synthetic Rubber	Buna N	1	23405	23405	23405	24614	24615	24664	- -	- -	- -	- -
38	Disc Holder	Bronze	Commercial	1	23404	23404	23404	24698	24691	24678	- -	- -	- -	- -
39	Valve Plug Nut	Stainless Steel	AISI Type 304	1	24801	24801	24801	24699	24693	24680	24839	24839	24849	24857
67 ★	Valve Plug Disc Complete	(NOTE 15)	(NOTE 15)	1	- -	- -	- -	- -	- -	- -	57888	57889	57890	57891

TABLE V

TABLE SHOWING PARTS FOR LX-4, LEX-4, LXY, LEXY, LXKY & LEXKY

PART NO.	PART NAME	MATERIAL	MATERIAL SPEC.	QTY. PER UNIT	REF. NO.
40	Adjusting Screw, Complete	Stainless Steel	AISI Type 416	1	9136
41	Top Spring Seat	Brass	ASTM B-16	1	4869
42	Adjusting Spring	Spring Steel	AISI 5160	1	3582
43	Spring	Cast Bronze	ASTM B-61	1	9372
44	Bottom Spring Seat	Brass	ASTM B-16	1	4870
45	Nut	Steel	Commercial	4	9340
46	Crosshead	Cast Iron	ASTM A-126, C1.B	1	12551
47 ❋	Diaphragm	Stainless Steel	AISI Type 302	1	4552
48	Diaphragm Stem Cap	Brass	ASTM B-16	1	10494
49	Connecting Rod	Bronze	ASTM B-61	2	4877
50	Crosshead, Lower	Forged Steel	AISI 1040	1	26021
51	Spring	Carbon Steel	AISI 1017	1	26024
52	Spring Guide	Steel	Commercial	1	26023
53	Diaphragm Stem	Brass	ASTM B-16	1	4864
54	Nut	Steel	ASTM A-194, Gr. 2H	8	3676
55	Diaphragm Spacer	Cast Iron	ASTM A-126, C1.B	1	26019
56	Stud Bolt	Steel	ASTM A-193, Gr. B7	4	9335

TABLE VI

TABLE SHOWING PARTS FOR LT-3, LET, LTY, LETY, LKTY, LEKTY, LAT, LAET, LAKT & LAEKT

PART NO.	PART NAME	MATERIAL	MATERIAL SPEC.	QTY. PER UNIT	REF. NO.
57	Diaphragm Cover	Cast Bronze	ASTM B-61	1	9988
58	Nut	Brass	ASTM B-16	1	12255
59	Bolt	Steel	ASTM A-193, Gr. B7	8	9995
60	Nut	Steel	ASTM A-194, Gr. 2H	8	13243
61 ❋	Diaphragm, Upper	Phosphor Bronze	ASTM B-103	1	9945
62 ❋	Diaphragm Cover, Gasket	Sheet Packing	Commercial	1	9996
63	Diaphragm Disc, Upper	Cast Bronze	ASTM B-61	1	9989
64	Diaphragm Spring	Steel, Cad. Pl.	ASTM A-228	1	10396
65	Diaphragm Spacer	Cast Bronze	ASTM B-61	1	10163
66	Diaphragm Stem	Brass	ASTM B-16	1	10164
68	Bottom Spring Seat	Powdered Iron	Commercial	1	4959

❋ RECOMMENDED SPARE PARTS

★ THESE PARTS SHOULD BE ON HAND, PLUS RECOMMENDED SPARE PARTS WHEN OVERHAULING THIS EQUIPMENT.

NOTE 1 - Quantities are; Six (6) for 1/2" to 1-1/2" sizes and Eight (8) for 2" for 4" Sizes.
NOTE 2 - Furnished with Seat Ring, Part No. 21; Dowel Pin, Part No. 27, and Cylinder Bottom in Sizes indicated, Part No. 28.
NOTE 3 - For 1/2" to 1-1/2" Sizes Material is Copper, Annealed and for 2" to 4" sizes Material is Copper, Asb. filled, Mat. Spec. for all sizes is B-152.
NOTE 4 - Material is copper, annealed for 1/2" to 1-1/2" and Sheet Packing for 2" to 4" sizes.
NOTE 5 - Quantities are: Six (6) for 2" and 3" Sizes. Eight (8) for 2-1/2", 3-1/2" & 4" sizes.
NOTE 6 - Furnished complete with Bushing, Part No. 25.
NOTE 7 - Quantities are: One (1) for 1/2" to 1" Sizes, Two (2) for 1-1/4" Size, Three (3) for 1-1/2" to 2-1/2" Sizes, Four (4) for 3" to 4".
NOTE 8 - Consists of Part Numbers 15, 16, 17 and 18.
NOTE 9 - For 1/2" to 2-1/2" Sizes the Material is Brass and Material Spec. is B-16. For 3" to 4" sizes the Material is Cast Bronze and Material Spec, is B-61.
NOTE 10 - Piston is furnished complete with Piston Ring(s).
NOTE 11 - One (1) Piston Ring per Valve 1/2" to 1-1/2" Sizes and Two (2) per Valve for 2" Size and larger.
NOTE 12 - Piston is furnished complete with O-Ring.
NOTE 13 - Consists of Part Numbers 35, 36, 37, 38 and 39.
NOTE 14 - Material for 2-1/2", 3" & 4" sizes is Bronze, Material Spec, Commercial and Stainless Steel, Material Spec. AISI Type 301 for 3-1/2" Size.
NOTE 15 - Material for 2-1/2", 3" & 4" sizes is Synthetic Rubber and Bronze, Material Spec Buns N and Commercial.
Material for 3-1/2" Size is Synthetic Rubber & Stainless Steel, Material Spec. Buns N AISI Type 301.

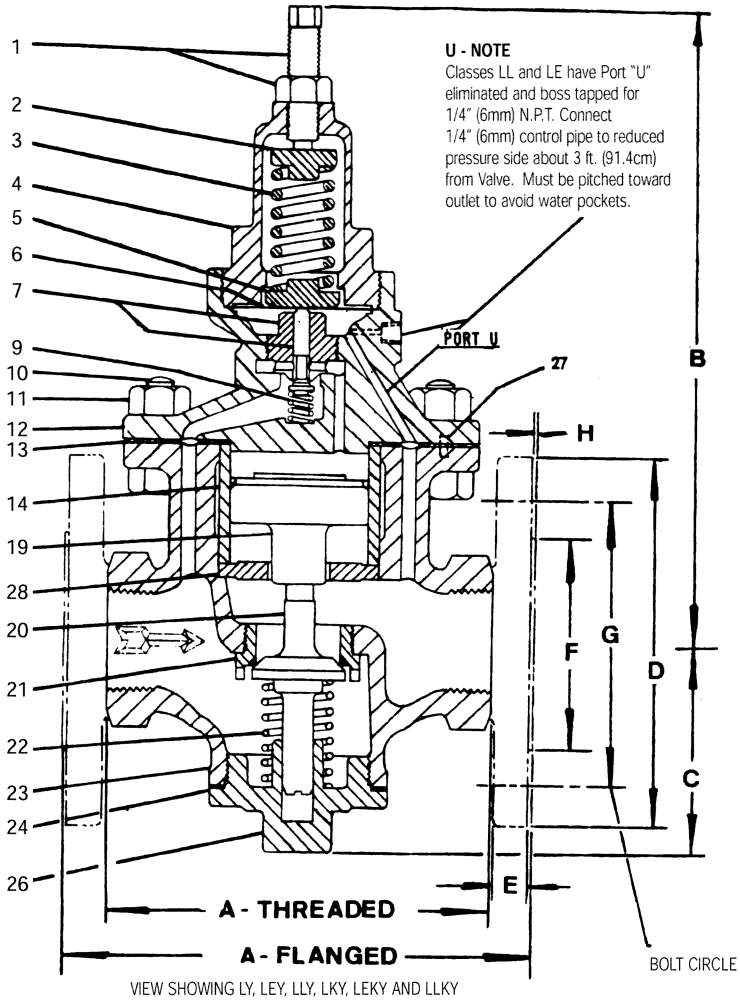

VIEW SHOWING LY, LEY, LLY, LKY, LEKY AND LLKY
(L-3, LE-3 ETC. SIMILAR EXCEPT PISTON IS PC.18)

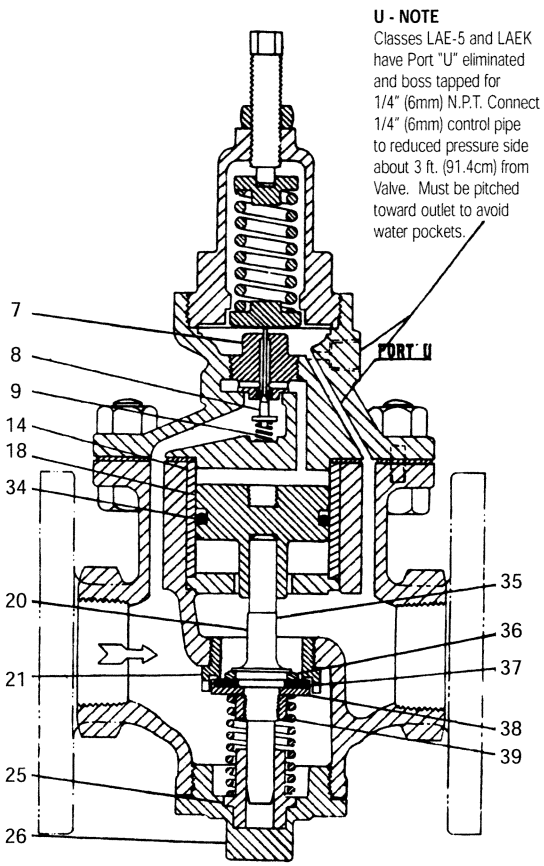

VIEW SHOWING CLASSES LA-5, LAK, LAE-5 AND LAEK
FOR DIMENSIONS, SEE CLASSES L-3 AND LKY ON PAGE 1

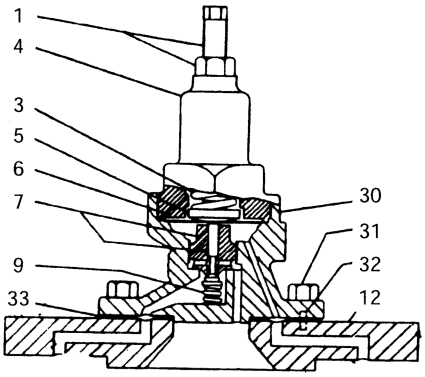

TOP CAP DESIGN OF 4" (100mm) SIZE

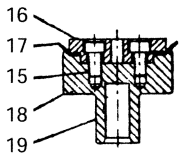

VIEW SHOWING PISTON
COMPLETE PC. 19, FOR LY,
LKY, LEY, LEKY, LLY & LLKY

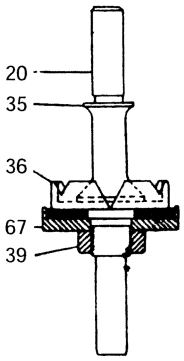

VIEW SHOWING VALVE PLUG COMPLETE
FOR 2-1/2" (65mm) TO 4" (100mm)
SIZES - LA-5 ETC.

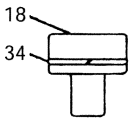

VIEW SHOWING
PISTON WITH PISTON RING
FOR L-3, LE-3 & LL-3

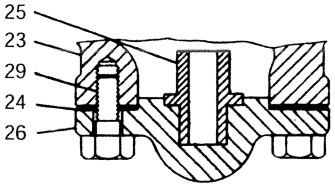

FLANGED BOTTOM CAP ON
2" (50mm) TO 4" (100mm) SIZES BUSH-
ING PC. 25 REQUIRED
FOR CAST IRON BOTTOM CAPS ONLY

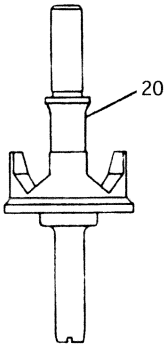

V-PORT VALVE PLUG FOR
2-1/2" (65mm) TO 4" (100mm)
SIZES - L-3 ETC.

PRESSURE REDUCING VALVE

SIZES 1/2" to 4"

CLASS L - STEEL

EXTERNAL VIEW OF "LS" VALVE
(USE FOR DIMENSIONAL PURPOSES ONLY)

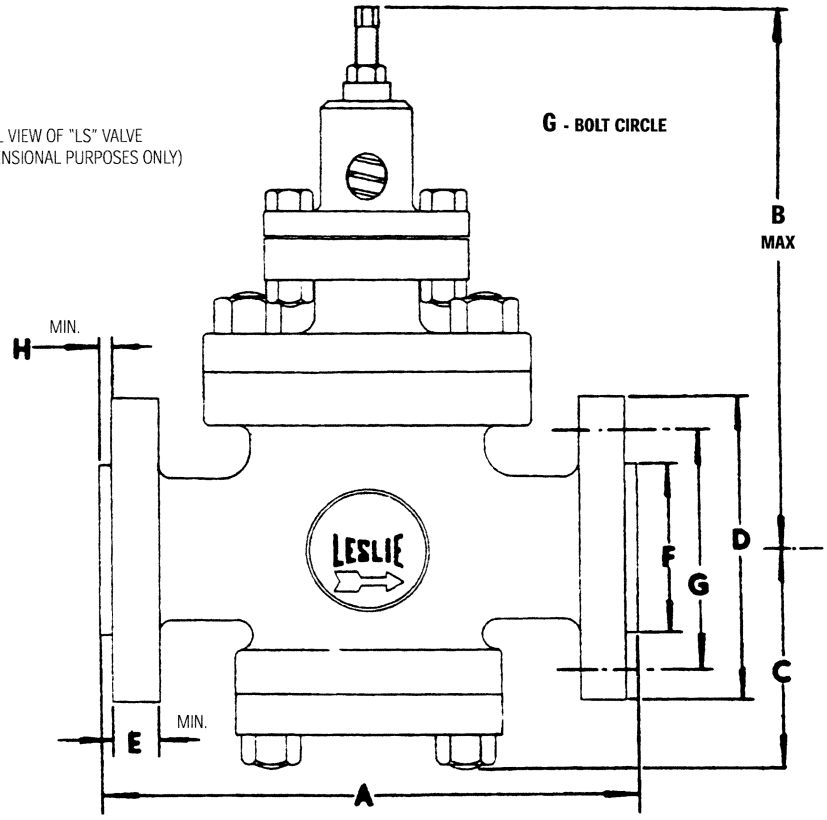

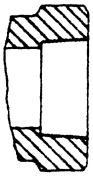

1/2" (15mm) - 2" (50mm)
THREAD END
BODY *

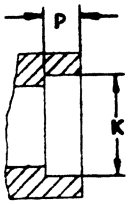

1/2" (15mm) - 2" (50mm)
SOCKET WELD
END BODY *

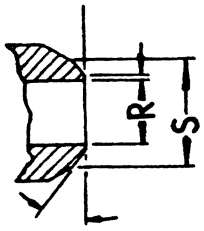

2-1/2" (65mm) - 4" (100mm)
BUTT WELD
END BODY *

* A, B & C DIMENSIONS ARE SAME AS 30 LB. ANSI FLANGE STANDARD

Nominal Pipe Size	K		P		R (sch. 80)		S	
	in.	mm	in.	mm	in.	mm	in.	mm
1/2"	.855	21.7	3/8	9.5	-	-	-	-
3/4"	1.065	27.1	1/2	12.7	-	-	-	-
1"	1.330	33.8	1/2	12.7	-	-	-	-
1-1/4"	1.675	42.5	1/2	12.7	-	-	-	-
1-1/2"	1.915	48.6	1/2	12.7	-	-	-	-
2"	2.406	61.1	5/8	15.9	-	-	-	-
2-1/2"	-	-	-	-	2.323	59	2-15/16	74.6
3"	-	-	-	-	2.900	73.7	3-9/16	90.5
3-1/2"	-	-	-	-	3.364	85.4	4	101.6
4	-	-	-	-	3.826	97.2	4-5/8	117.5

WHEN ORDERING PARTS, PLEASE GIVE SIZE, PART NAME AND PART REFERENCE NUMBER FROM TABLE BELOW.
USE PART NUMBER ONLY TO LOCATE PART ON DRAWING.

PART NO.	PART NUMBER	MATERIAL	QTY. PER UNIT	REFERENCE NUMBERS - EACH SIZE									
				1/2	3/4	1	1-1/4	1-1/2	2	2-1/2	3	3-1/2	4
1	Adjusting Screw, Complete	Stalnless Steel	1	9136	9136	9136	9136	9136	9136	9136	9136	9136	9136
2	Top Spring Seat	Brass	1	4869	4869	4869	4869	4869	4869	4869	4869	4869	4869
3	Adjusting Spring LS-5, LES-5, LYS-1, &LEYS-1	Steel, Plated	1	4987	4987	4987	4987	4987	4987	4987	4987	4987	4987
3	Adjusting Spring, LLS-5 & LLYS-1	Steel, Plated	1	3582	3582	3582	3582	3582	3582	3582	3582	3582	3582
4	Adjusting Spring Case	Steel	1	27392	27392	27392	27392	27392	27392	27392	27392	27392	27392
5	Bolt	Steel	4	33754	33754	33754	33754	33754	33754	33754	33754	33754	33754
6	Bottom Spring Seat	Iron	1	4959	4959	4959	4959	4959	4959	4959	4959	4959	4959
7 ①	Diaphragm, LS-5, LES-5, LYS-1 & LEYS-1	Inconel X	1	56647	56647	56647	56647	56647	56647	56647	56647	56647	56647
7 ①	Diaphragm, LLS-5 & LLYS-1	Stainless Steel	1	4552	4552	4552	4552	4552	4552	4552	4552	4552	4552
8 ❋	Controlling Valve & Seat Set LS	Stainless Steel	1	56648	56648	56648	56648	56648	56648	56648	56648	56648	56648
8 ❋	Controlling Valve & Seat Set LYS	Stainless Steel	1	61655	61655	61655	61655	61655	61655	61655	61655	61655	61655
10	Stud	Steel	(A)	9792	9792	9792	11106	11106	11107	11107	11108	11108	11108
11	Nut	Steel	(A)	3677	3677	3677	3677	3677	3678	3678	3679	3679	3679
12 ❋	Controlling Valve Spring	Wire Nickel Alloy	1	10756	10756	10756	10756	10756	10756	10756	10756	10756	10756
13	Top Cap, LS-5 & LYS-1	Steel	1	52178	52178	52178	56225	52165	52196	52130	57028	50089	50093
13	Top Cap, LES-5, LLS-5, LEYS-A & LLYS-1	Steel	1	56778	56778	56778	50095	50124	50253	50258	50500	50511	50513
14 ①	Top Cap Gasket	Flexible Metallic	1	15564	15564	15564	22718	52212	15552	52154	23308	56614	55793
15 ①	Port Hole Gasket	Flexible Metallic	2	18175	18175	18175	18175	18175	41579	52153	41579	41579	55794
16 ❋	Cylinder Liner	Sat., Hardened	1	11121	11121	11121	11172	11189	11122	11209	11195	11223	11966
16 ❋	Cylinder Liner	Bronze	1	4955	4955	4955	4940	4972	9039	9092	9169	9187	12006
17 ①	Piston Ring (LS-5)	Cast Iron	(B)	3355	3355	3355	3358	3359	3361	3362	3363	3365	3367
18 ❋	Piston (LS-5) (C)	Stainless Steel	1	10686	10686	10686	59921	10737	9439	9442	9570	9563	11975
19	Cylinder Bottom	(D)	1	22617	22617	22617	22618	22619	22620	10058	10059	10060	11978
20	Valve Body, Threaded (E)	Cast Steel	1	52166	52048	51711	51662	51582	51578	- -	- -	- -	- -
20	Valve Body, Socket Weld Ends (E)	Cast Steel	1	52177	52053	51740	51683	51618	51581	- -	- -	- -	- -
20	Valve Body, Butt Weld Ends (E)	Cast Steel	1	- -	- -	- -	- -	- -	- -	52182	51264	51509	51576
20	Valve Body, Flanged 150 Lb. (E)	Cast Steel	1	50514	50536	50667	50907	51002	51106	56764	51258	51464	51510
20	Valve Body, Flanged 300 Lb. (E)	Cast Steel	1	50533	50550	50786	50908	51092	51166	51257	51263	51481	51560
20	Valve Body, Flanged 400 Lb. (E)	Cast Steel	1	52997	55232	53812	40893	57026	56641	52129	52905	56608	51577
20	Valve Body, Flanged 600 Lb. (E)	Cast Steel	1	52997	55232	53812	40893	57026	56641	52129	52905	56608	55774
21	Valve Plug	Sst., Hardened	1	11123	11123	11190	11191	11192	11124	47700	47630	47571	47568
22 ❋	Valve Plug Spring	Inconel	1	9464	9464	9464	10201	3629	9252	9087	9176	4478	4478
23 ①	Bottom Cap Gasket	Flexible Metallic	1	40957	40957	40957	40958	52211	41580	34209	40959	56615	55795
24	Bottom Cap (F)	Steel	1	52179	52179	52179	56224	52163	52192	52146	54365	56612	53203
25	Nut	Steel	(G)	3676	3676	3676	3676	3676	3677	3677	3678	3678	3678
26	Stud	Steel	(G)	9465	9465	9465	9465	9465	11106	11106	11107	11107	11107
27	Nut	Steel	4	3676	3676	3676	3676	3676	3676	3676	3676	3676	3676
28	Dowel Pin	Brass	1	3702	3702	3702	3702	3702	3702	3702	3702	3705	3705
29	Piston Disc (LYS-1)	Brass	1	30469	30469	30469	30491	30495	30499	32943	32947	32951	32955
30 ①	Piston Cup Washer (LYS-1)	Teflon	1	30470	30470	30470	30492	30496	30500	32944	32048	32952	32957
31	Screw (LYS-1)	Steel	(H)	39680	39680	39680	39596	39596	39596	39510	39510	39510	39512
32 ①	Piston, Complete (LYS-1)	Stainless Steel	1	59928	59928	59928	59965	59924	30497	59947	59953	55957	59962
	Cont. Valve Seat Wrench	Steel	1	33652	33652	33652	33652	33652	33652	33652	33652	33652	33652

① RECOMMENDED SPARE PARTS
❋ THESE PARTS SHOULD BE ON HAND, PLUS RECOMMENDED SPARE PARTS WHEN OVERHAULING THIS EQUIPMENT.

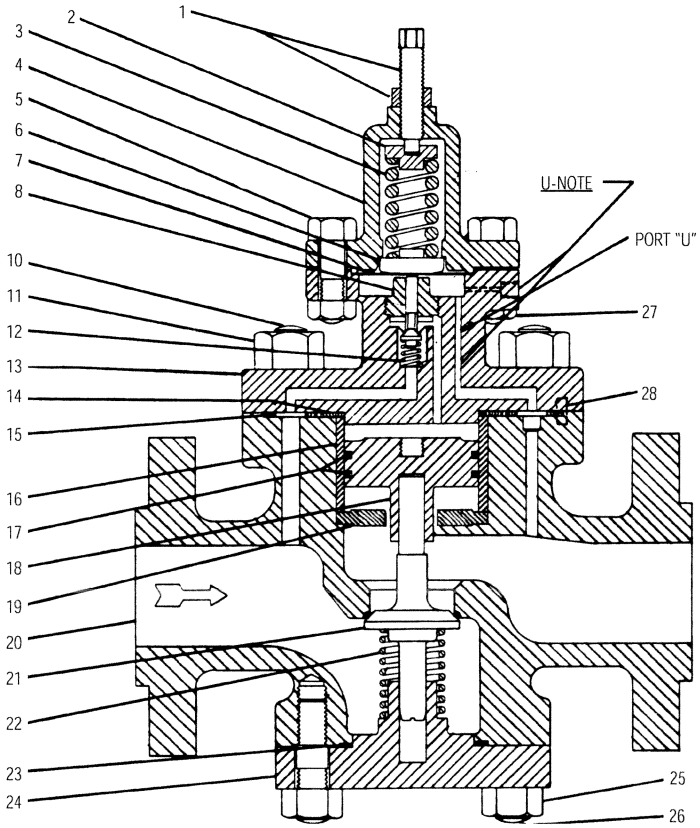

U - NOTE
CLASSES LES-5, LEYS-1, LLS-5 & LLYS-1 HAVE PORT "U" ELIMINATED AND BOSS TAPPED FOR 1/4" NPT. CONNECT 1/4" CONTROL PIPE TO REDUCED PRESSURE SIDE ABOUT 3 FT. FROM VALVE. MUST BE PITCHED TOWARD OUTLET TO AVOID WATER POCKETS.

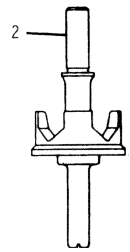

2-1/2" (65mm) - 4" (100mm)
PORTED VALVE PLUG

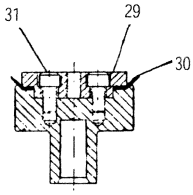

PC. 32
CLASS LYS -1, LTYS-1
LXYS-1 PISTON
COMPLETE

1/2" - 4" LS-5, LES-5, LLS-5
LYS-1, LEYS-1 & LLYS-1

PART NO.	PART NAME	MATERIAL	QTY. PER UNIT	REF. NO. 1/2 - 4
6	Diaphragm Disc	Brass	1	4959
33	Diaphragm Cover	Cast Bronze	1	9988
34	Nut	Brass	1	12255
35	Bolt	Steel	8	9995
36	Nut	Steel	8	13243
37 ①	Diaphragm, Upper	Phosphor Bronze	1	9945
38 ①	Diaphragm Disc, Gasket	Sheet Packing	1	9996
39	Diaphragm Disc, Upper	Cast Bronze	1	9989
40 ❋	Diaphragm Spring	Steel, Plated	1	10396
41	Diaphragm Spacer	Cast Bronze	1	32217
42	Diaphragm Stem	Brass	1	10164

FOR APPROXIMATE WEIGHT ADD 12 LBS. TO WEIGHT OF LS-5 VALVE.

CLASSIFICATION	
BASIC STANDARD CLASS	WITH REMOTELY ADJUSTED SUPERSTRUCTURE
LS-5	LTS-5
LES-5	LETS-5
LYS-1	LTYS-1
LEYS-1	LETYS-1

LTS - 5 LTYS - 1

NOMINAL PIPE SIZE		B-2
1/2" - 1"	in	12-13/16
	mm	325.4
1-1/4"	in	13-1/16
	mm	331.8
1-1/2"	in	13-3/16
	mm	335
2"	in	13-1/4
	mm	336.6
2-1/2"	in	14-1/4
	mm	362
3"	in	14-15/16
	mm	379.4
3-1/2"	in	15-1/2
	mm	393.7
4"	in	15-7/8
	mm	403.2

NOTE A - Quantities are: Six (6) for 1/2" to 1-1/4" Sizes, Eight (8) for 1-1/2" to 3" Sizes and Ten (10) for 3-1/2" and 4" Sizes.
NOTE B - Two Piston Rings are required per Valve.
NOTE C - Piston is furnished complete with Piston Rings.
NOTE D - For 1/2" to 2" Sizes, Material is Cold Rolled Steel and for 2-1/2" to 4" Sizes, Material is Cast Iron.
NOTE E - Main Body is furnished complete with Studs, Nuts, Cylinder Bottom, Dowel Pins and Stellited Integral Seating Surface.
NOTE F - Bottom Cap is furnished with hardened Guide Bushing.
NOTE G - Quantities are: Six (6) for 1/2" to 2" Sizes, Eight (8) for 2-1/2" to 3-1/2" Sixes and Ten (10) for 4" Size.
NOTE H - Quantities are: One (1) for 1/2" to 1", Two (2) for 1-1/4" Size, Three (3) for 1-1/2" to 2-1/2" Sizes and four (4) for 3" and 4" Sizes.

PART NO.	PART NAME	MATERIAL	QTY. PER UNIT	REF. NO. 1/2 - 3
1	Adjusting Screw, Compl.	Stainless Steel	1	9136
2	Top Spring Seat	Brass	1	4869
3	Adjusting Spring	Steel, Plated	1	3582
4	Adjusting Spring Case	Cast Bronze	1	9372
5	Bottom Spring Seat	Brass	1	4870
7 ①	Diaphragm, Upper	Stainless Steel	2	4552
43	Nut	Brass	4	9340
44	Crosshead	Cast Iron	1	12551
45	Diaphragm Stem Cap	Brass	1	10494
46	Connecting Rod	Bronze	2	4877
47	Crosshead, Lower	Forged Steel	1	26021
48 ❋	Spring	Steel, Plated	1	26024
49	Spring Guide	Steel	1	26023
50	Nut	Steel	8	3676
51	Diaphragm Spacer	Cast Iron	1	26019
52 ❋	Diaphragm Stem Guide	Stainless Steel	1	4872
53	Stud	Steel	4	18405
54	Diaphragm Stem	Brass	1	4864

① RECOMMENDED SPARE PARTS
❋ THESE PARTS SHOULD BE ON HAND, PLUS RECOMMENDED SPARE PARTS WHEN OVERHAULING THIS EQUIPMENT.

CLASSIFICATION	
BASIC STANDARD CLASS	WITH DIFFERENTIAL PRESSURE REGULATOR
LS-5	LXS-5
LES-5	LEXS-5
LYS-1	LXYS-1
LEYS-1	LEXYS-1

LTS - 5 LTYS - 1

FOR APPROXIMATE WEIGHT ADD 7 LBS. TO WEIGHT OF LS-5 VALVE

NOMINAL PIPE SIZE		B-2
1/2" - 1"	in	15-9/16
	mm	395.3
1-1/4"	in	15-13/16
	mm	401.6
1-1/2"	in	15-15/16
	mm	404.8
2"	in	16
	mm	406.4
2-1/2"	in	17
	mm	431.8
3"	in	17-11/16
	mm	449.3

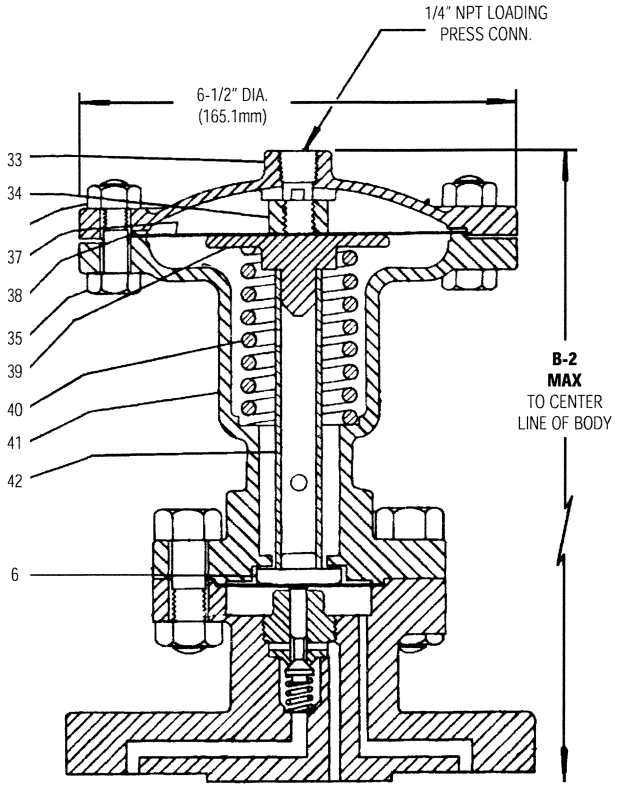

VIEW SHOWING DIAPHRAGM SPACER SUB-ASSEMBLY FOR REMOTELY ADJUSTED CLASSES LTS-5 AND LTYS-1 UNIT REF. NO. 008023702

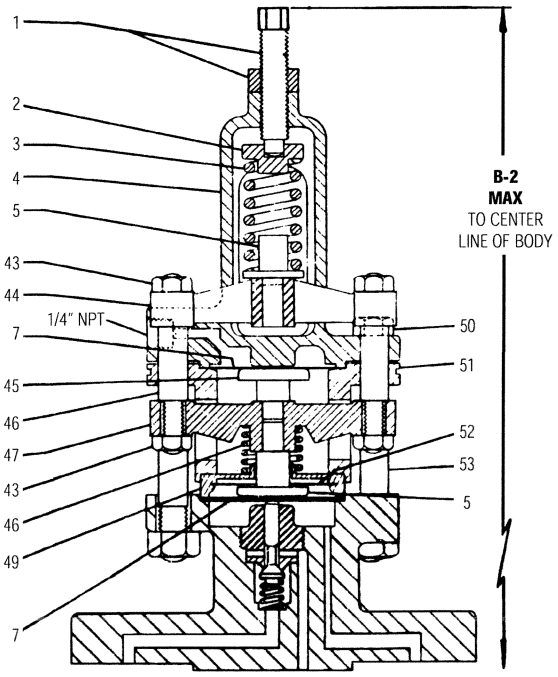

VIEW SHOWING SPRING CASE SUB-ASSEMBLY FOR DIFFERENTIAL PRESSURE REDUCING VALVE CLASSES LXS-5 AND LXYS-1 UNIT REF. NO. 008173702

FOR ALL OTHER PARTS ON LXS-5 USE CLASS LS-5 AND FOR LXYS-1 USE CLASS LYS-1 EXCLUDING PART NUMBERS 1 THRU 6

DIMENSIONS IN INCHES AND MILLIMETERS

NOMINAL PIPE SIZE		A	B	C	D	E	F	G	H	NO. OF HOLES	BOLT SIZE	BOLT HOLE	NET WEIGHT * (APPROXIMATE)	
150 LB. ANSI FLANGE STANDARD														
1/2"	in	7-5/8	11-11/16	3-7/16	3-1/2	5/16	1-3/8	2-3/8	1/16	4	1/2	5/8	lb	32
15	mm	193.7	296.9	87.3	88.9	7.9	34.9	60.3	1.6	4	12.7	15.9	kg	14.5
3/4"	in	7-5/8	11-11/16	3-7/16	3-7/8	3/8	1-11/16	2-3/4	1/16	4	1/2	5/8	lb	33
20	mm	193.7	296.9	87.3	98.4	9.5	42.9	69.9	1.6	4	12.7	15.9	kg	15
1"	in	7-1/2	11-11/16	3-7/16	4-1/4	3/8	2	3-1/8	1/16	4	1/2	5/8	lb	39
25	mm	190.5	296.9	87.3	108	9.5	50.8	79.3	1.6	4	12.7	15.9	kg	17.7
1-1/4"	in	7-7/8	11-15/16	3-13/16	4-5/8	7/16	2-1/2	3-1/2	1/16	4	1/2	5/8	lb	44
32	mm	200.0	303.2	96.8	117.5	11.1	63.5	88.9	1.6	4	12.7	15.9	kg	20
1-1/2"	in	8-3/8	12-1/16	4-1/8	5	1/2	2-7/8	3-7/8	1/16	4	1/2	5/8	lb	45
40	mm	212.7	306.4	104.8	127.0	12.7	73.0	98.4	1.6	4	12.7	15.9	kg	20.4
2"	in	10-1/4	12-1/8	4-1/2	6	9/16	3-5/8	4-3/4	1/16	4	5/8	3/4	lb	76
50	mm	260.4	308.0	114.3	152.4	14.3	92.1	120.7	1.6	4	15.9	19.1	kg	34.5
2-1/2"	in	11-5/8	13-1/8	6	7	5/8	4-1/8	5-1/2	1/16	4	5/8	3/4	lb	98
65	mm	293.3	333.4	152.4	177.8	15.9	104.8	139.7	1.6	4	15.9	19.1	kg	44.5
3"	in	12-1/2	13-13/16	6-13/16	7-1/2	11/16	5	6	1/16	4	5/8	3/4	lb	146
80	mm	317.5	350.8	173.0	190.5	17.5	127.0	152.4	1.6	4	15.9	19.1	kg	66.2
3-1/2"	in	13.3/8	14-3/8	7-5/8	8-1/2	3/4	5-1/2	7	1/16	8	5/8	3/4	lb	152
90	mm	339.7	365.1	193.7	215.9	19.1	139.7	177.8	1.6	8	15.9	19.1	kg	68.9
4"	in	14-3/8	14-3/4	7-9/16	9	7/8	6-3/16	7-1/2	1/16	8	5/8	3/4	lb	204
100	mm	365.1	374.7	192.1	228.6	22.2	157.2	190.5	1.6	8	15.9	19.1	kg	92.5
300 LB. ANSI FLANGE STANDARD														
1/2"	in	8	11-11/16	3-7/16	3-3/4	1/2	1-3/8	2-5/8	1/16	4	1/2	5/8	lb	33
15	mm	203.2	296.9	87.3	95.3	12.7	34.9	66.7	1.6	4	12.7	15.9	kg	15
3/4"	in	8	11-11/16	3-7/16	4-5/8	9/16	1-11/16	3-1/4	1/16	4	5/8	3/4	lb	34
20	mm	203.2	296.9	87.3	117.5	14.3	42.9	82.6	1.6	4	15.9	19.1	kg	15.4
1"	in	8	11-11/16	3-7/16	4-7/8	5/8	2	3-1/2	1/16	4	5/8	3/4	lb	40
25	mm	203.2	296.9	87.3	123.8	15.9	50.8	88.9	1.6	4	15.9	19.1	kg	18.1
1-1/4"	in	8-3/8	11-15/16	3-13/16	5-1/4	11/16	2-1/2	3-7/8	1/16	4	5/8	3/4	lb	46
32	mm	212.7	303.2	96.8	133.4	17.5	63.5	98.4	1.6	4	15.9	19.1	kg	20.9
1-1/2"	in	8-7/8	12-1/16	4-1/8	6-1/8	3/4	2-7/8	4-1/2	1/16	4	3/4	7/8	lb	48
40	mm	225.4	306.4	104.8	155.6	19.1	73.0	114.3	1.6	4	19.1	22.2	kg	21.8
2"	in	10-3/4	12-1/8	4-1/2	6-1/2	13/16	3-5/8	5	1/16	8	5/8	3/4	lb	78
50	mm	273.1	308.0	114.3	165.1	20.6	92.1	127.0	1.6	8	15.9	19.1	kg	35.4
2-1/2"	in	12-1/4	13-1/8	6	7-1/2	15/16	4-1/8	5-7/8	1/16	8	3/4	7/8	lb	104
65	mm	311.2	333.4	152.4	190.5	23.8	104.8	149.2	1.6	8	19.1	22.2	kg	47.2
3"	in	13-1/4	13-13/16	6-13/16	8-1/4	1-1/16	5	6-5/8	1/16	8	3/4	7/8	lb	148
80	mm	336.5	350.8	173.0	209.6	27	127.0	168.3	1.6	8	19.1	22.2	kg	67.1
3-1/2"	in	14-1/8	14-3/8	7-5/8	9	1-1/8	5-1/2	7-1/4	1/16	8	3/4	7/8	lb	156
90	mm	358.8	365.1	193.7	228.6	28.6	139.7	184.2	1.6	8	19.1	22.2	kg	70.8
4"	in	15	14-3/4	7-9/16	10	1-3/16	6-3/16	7-7/8	1/16	8	3/4	7/8	lb	214
100	mm	381.0	374.7	192.1	254.0	30.2	157.2	200.0	1.6	8	19.1	22.2	kg	97.1
400 AND 600 LB. ANSI FLANGE STANDARD														
1/2"	in	8-1/2	11-11/16	3-7/16	3-3/4	9/16	1-3/8	2-5/8	1/4	4	1/2	5/8	lb	33
15	mm	215.9	296.9	87.3	95.3	14.3	34.9	66.7	6.3	4	12.7	15.9	kg	17.2
3/4"	in	8-1/2	11-11/16	3-7/16	4-5/8	5/8	1-11/16	3-1/4	1/4	4	5/8	3/4	lb	40
20	mm	215.9	296.9	87.3	117.5	15.9	42.9	82.6	6.3	4	15.9	19.1	kg	18.1
1"	in	8-1/2	11-11/16	3-7/16	4-7/8	11/16	2	3-1/2	1/4	4	5/8	3/4	lb	42
25	mm	215.9	296.9	87.3	123.8	17.5	50.8	88.9	6.3	4	15.9	19.1	kg	19.1
1-1/4"	in	9	11-15/16	3-13/16	5-1/4	13/16	2-1/2	3-7/8	1/4	4	5/8	3/4	lb	47
32	mm	228.6	303.2	96.8	133.4	20.6	63.5	98.4	6.3	4	15.9	19.1	kg	21.3
1-1/2"	in	9-1/2	12-1/16	4-1/8	6-1/8	7/8	2-7/8	4-1/2	1/4	4	3/4	7/8	lb	60
40	mm	241.3	306.4	104.8	155.6	22.2	73.0	114.3	6.3	4	19.1	22.2	kg	27.2
2"	in	11-1/2	12-1/8	4-5/8	6-1/2	1	3-5/8	5	1/4	8	5/8	3/4	lb	79
50	mm	292.1	308.0	114.3	165.1	25.4	92.1	127.0	6.3	8	15.9	19.1	kg	35.8
2-1/2"	in	13	13-1/8	6	7-1/2	1-1/8	4-1/8	5-7/8	1/4	8	3/4	7/8	lb	108
65	mm	330.2	333.4	152.4	190.5	28.6	104.8	149.2	6.3	8	19.1	22.2	kg	49
3"	in	14	13-13/16	6-13/16	8-1/4	1-1/4	5	6-5/8	1/4	8	3/4	7/8	lb	150
80	mm	355.6	350.8	173.0	209.6	31.8	127.0	168.3	6.3	8	19.1	22.2	kg	68
3-1/2"	in	15	14-3/8	7-5/8	9	1-3/8	5-1/2	7-1/4	1/4	8	7/8	1	lb	165
90	mm	381.0	365.1	193.7	228.6	34.9	139.7	184.2	6.3	8	22.2	25.4	kg	74.8
400 LB. ANSI FLANGE STANDARD														
4"	in	15-3/4	14-3/4	7-9/16	10	1-3/8	6-3/16	7-7/8	1/4	8	7/8	1	lb	235
100	mm	400.1	374.7	192.1	254.0	34.9	157.2	200.0	6.3	8	22.2	25.4	kg	106.6
600 LB. ANSI FLANGE STANDARD														
4"	in	16	14-3/4	7-9/16	10-3/4	1-1/2	6-3/16	8-1/2	1/4	8	7/8	1	lb	245
100	mm	406.4	374.7	192.1	273.1	38.1	157.2	215.9	6.3	8	22.2	25.4	kg	111.1

LESLIE CONTROLS, INC.
A subsidiary of CIRCOR International, Inc.
12501 Telecom Drive • Tampa, FL 33637-0906

Ph: (813) 978-1000 • Fax: (813) 978-0984
www.lesliecontrols.com